EMMEVI

Ventilatori Tangenziali
Cross-Flow Fans

TG-80/1

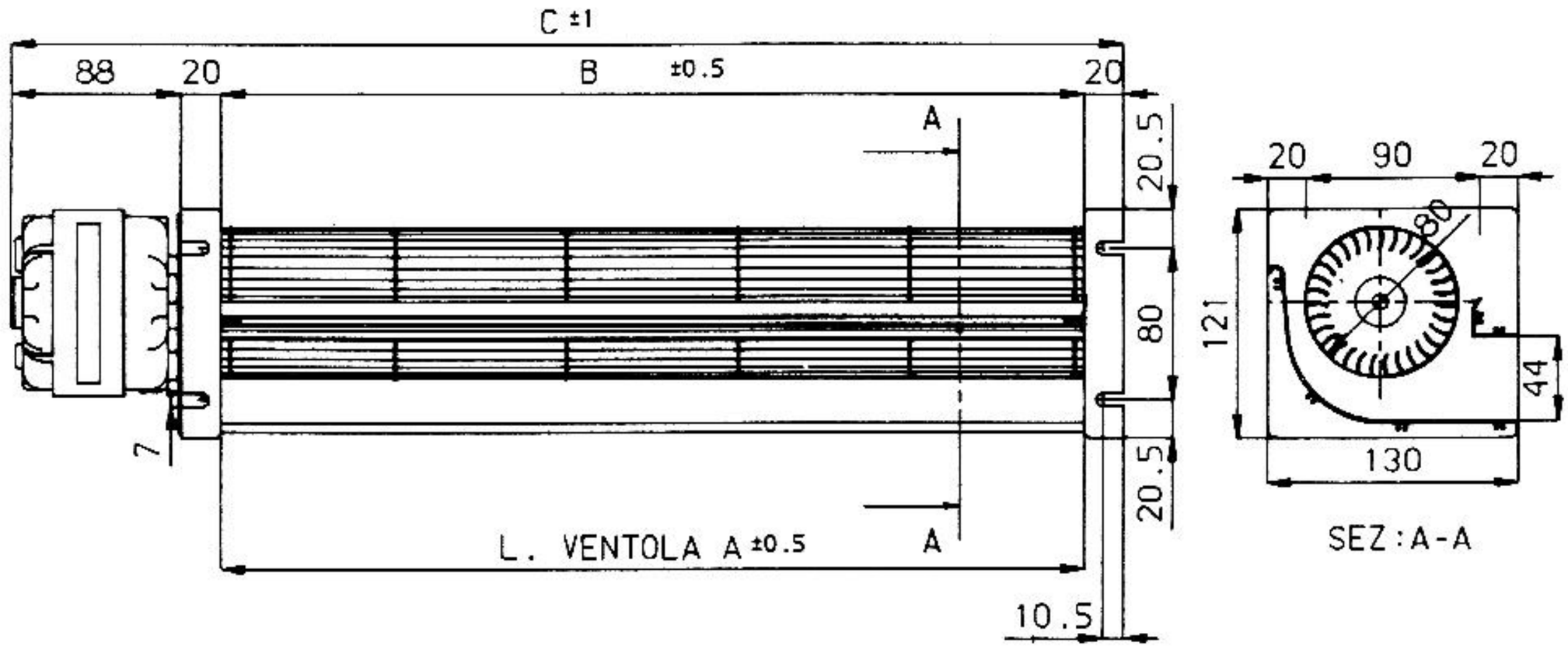

TGA - 80/1 - 180 ...
TGA - 80/1 - 240 ...
TGA - 80/1 - 270 ...
TGA - 80/1 - 300 ...
TGA - 80/1 - 330 ...
TGA - 80/1 - 360 ...
TGA - 80/1 - 405 ...
TGA - 80/1 - 420 ...
TGA - 80/1 - 480 ...
TGA - 80/1 - 505 ...
TGA - 80/1 - 540 ...
TGA - 80/1 - 605 ...

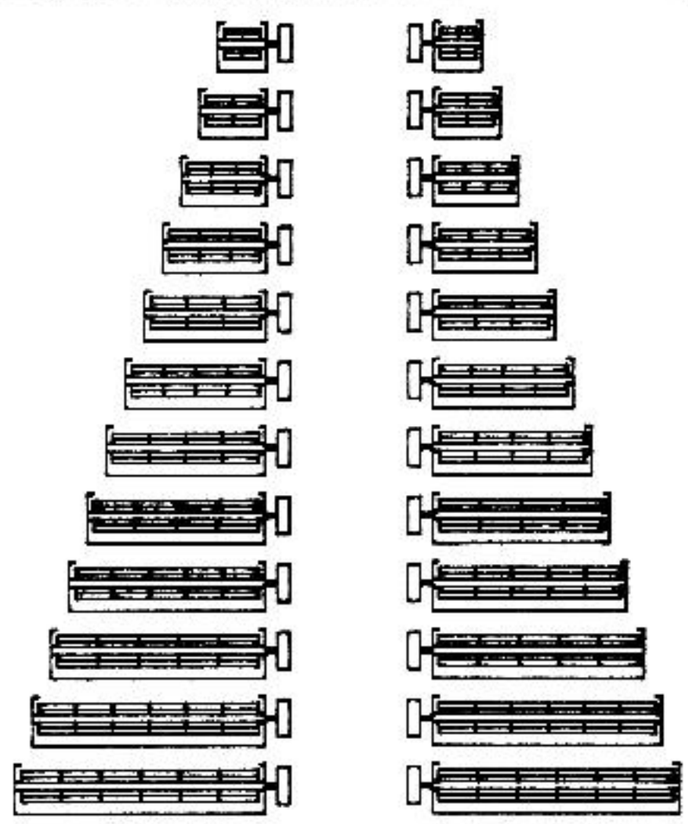

TGO - 80/1 - 180 ...
TGO - 80/1 - 240 ...
TGO - 80/1 - 270 ...
TGO - 80/1 - 300 ...
TGO - 80/1 - 330 ...
TGO - 80/1 - 360 ...
TGO - 80/1 - 405 ...
TGO - 80/1 - 420 ...
TGO - 80/1 - 480 ...
TGO - 80/1 - 505 ...
TGO - 80/1 - 540 ...
TGO - 80/1 - 605 ...

MODELLO MODEL	A	B	C	G/' min⁻¹	Q m³/h	G/' min⁻¹	Q m³/h
TG ... 80/1 - 180/ ...	180	180	308	1400	180	2800	285
TG ... 80/1 - 240/ ...	240	240	368	1400	235	2800	380
TG ... 80/1 - 270/ ...	270	270	398	1400	270	2800	430
TG ... 80/1 - 300/ ...	300	300	428	1400	295	2800	475
TG ... 80/1 - 330/ ...	330	330	458	1400	325	2800	520
TG ... 80/1 - 360/ ...	360	360	488	1400	355	2800	570
TG ... 80/1 - 405/ ...	405	405	533	1400	400	2800	640
TG ... 80/1 - 420/ ...	420	420	548	1400	415	2800	665
TG ... 80/1 - 480/ ...	480	480	608	1400	475	2800	760
TG ... 80/1 - 505/ ...	505	505	633	1400	500	2800	800
TG ... 80/1 - 540/ ...	540	540	668	1400	535	2800	
TG ... 80/1 - 605/ ...	605	605	733	1400	600	2800	